Face Visors
Technical File

MTC – Private – Commercial in Confidence

1

Overview

Problem and Aim
Bill Of Materials
Tools used
Manufacturing Methods

2

Assembly Instructions

The steps on how to assemble the parts to create a Visor

3

User Instructions

How the user should assemble and maintain the Visor

Problem:

Due to COVID-19 there is a requirement to manufacture and supply more Face Visors for the NHS. The current face shields are difficult to quickly manufacture within the UK supply chain and cause discomfort for the user.

Aim:

To develop a Face Visor with minimal components and using an available and fast means of manufacture (i.e. no tooling required and minimal set up costs), that is also comfortable for the user based on feedback.

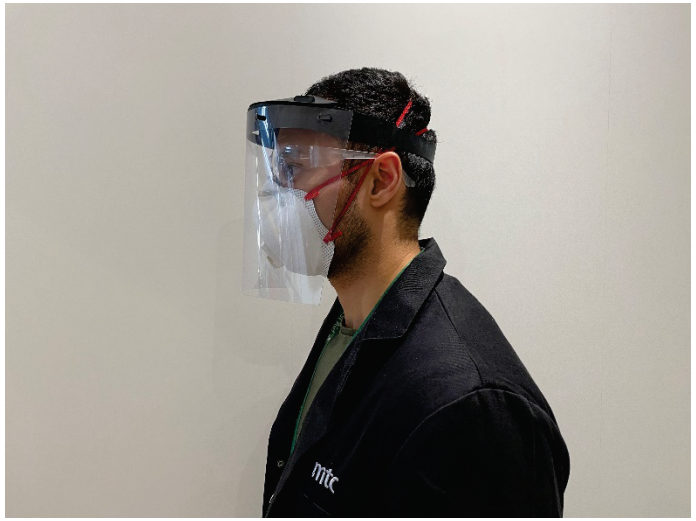

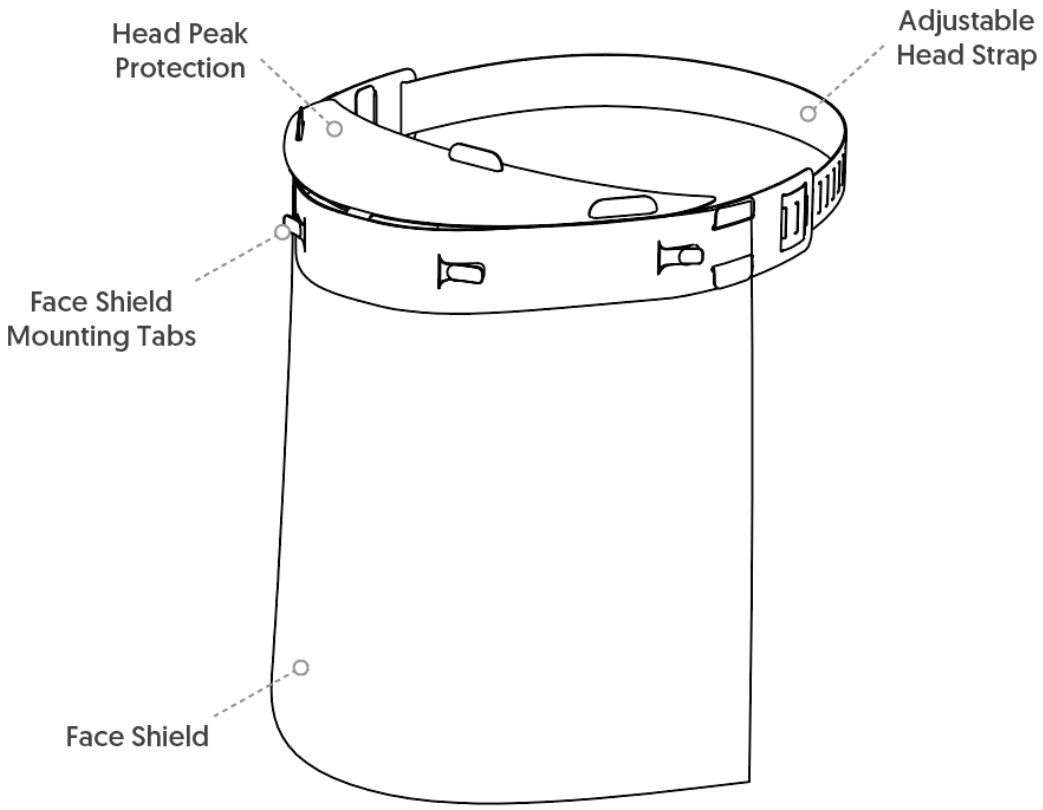
Head Peak
Protection
Adjustable
Head Strap
Face Shield
Mounting Tabs
Face Shield

Part	Description	Material	Dimensions
A	Head Peak	Polypropylene sheet	0.5mm thick, 600 x 300 mm sheets
B	Head Band		
C	Head Strap		
D	Face Shield	PVC / clear binding cover	250 micron, A4

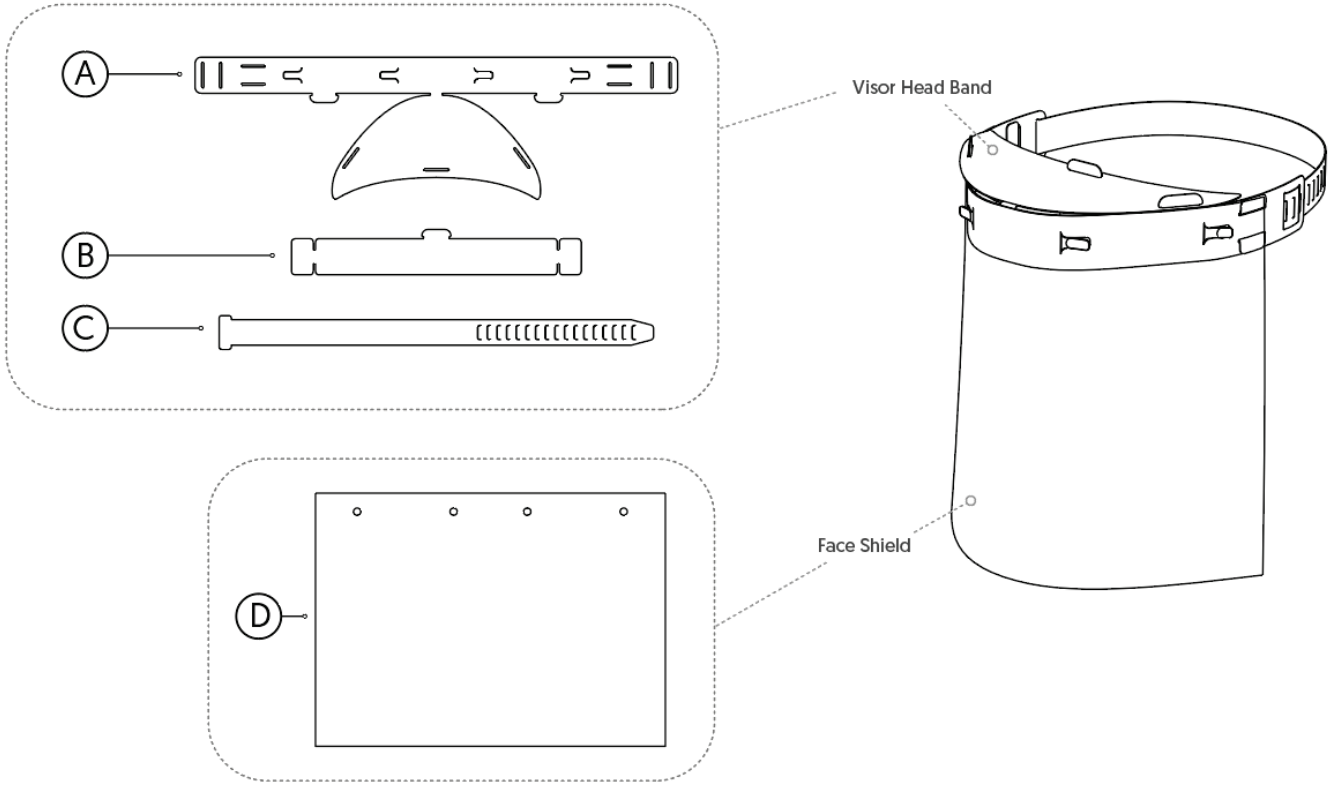

DXF files can be found in design pack.

Item	Use	Specification used at MTC
Laser Cutter	To create shapes within the Polypropylene	Trotec Speedy 100 CO2 Laser, 60 Watt Power=90.0 Velocity=3.90 Frequency=2000
Hole Punch	To create holes in the PVC	A6 hole space setting required
Stanley Knife	Deburring	Martor safety knife

Trotec Speedy 100

Example hole punch

Example safety knife

Visor Headband:

Current method:

- Currently Laser Cut due to machines availability and speed of manufacture at The MTC.
- The Polypropylene sheets are hand cut to 600 x 300 mm to fit onto the Trotec Speedy 100 machine.

Other suitable manufacturing methods:

- Water Jet cut
- Stamping
- Knife cut

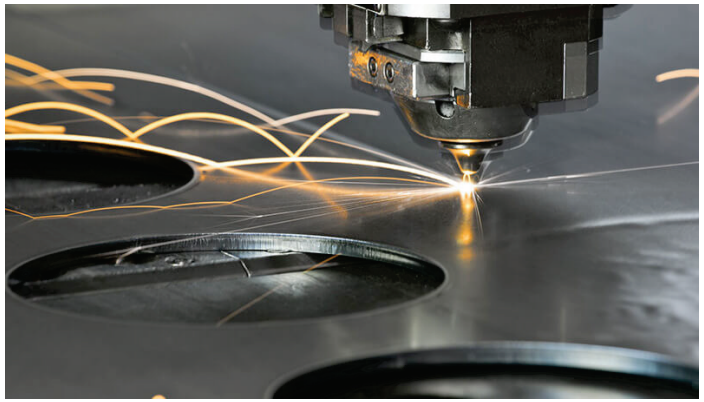

Laser Cutting

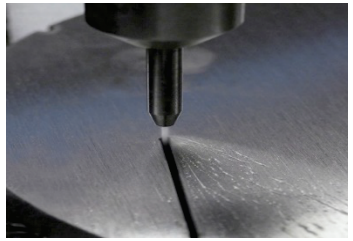

Water Jet Cutting

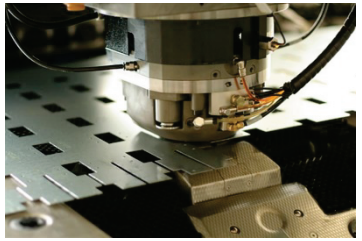

Stamping

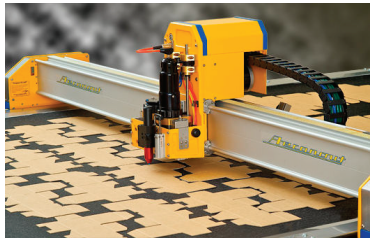

Knife Cutting

Face Shield:

Current method:

- Currently A4 PVC sheets are hole punched, due to equipment availability and speed.
- With a hole punch on the A6 setting, punch the A4 PVC sheet along one of the longer sides from both of the short sides

Other suitable manufacturing methods:

- Laser cut
- Water Jet cut
- Stamping

Other suitable materials:

- A few examples are: Acetate, Clear Polypropylene
- Sheets could be supplied and cut out in the required dimensions, giving more flexibility in the shape as well

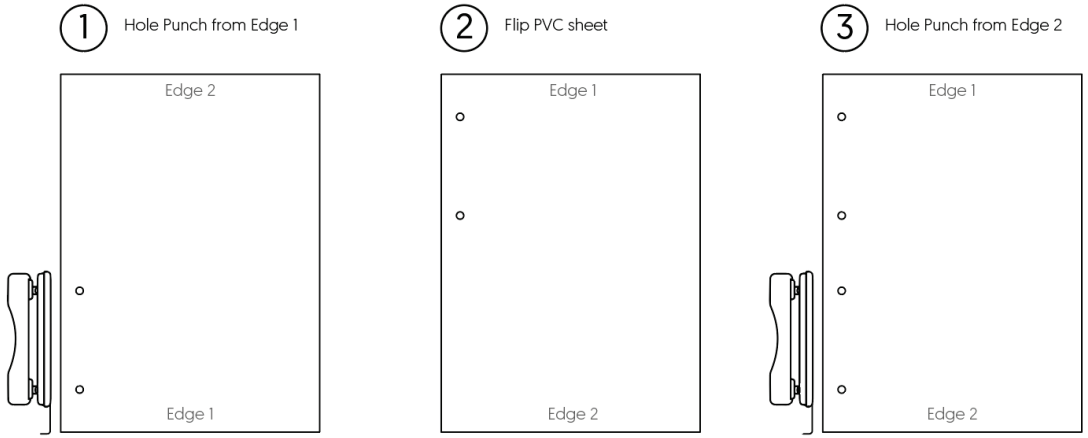

Hole Punching

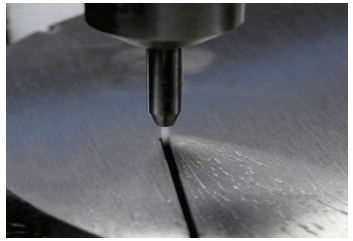

Water Jet Cutting

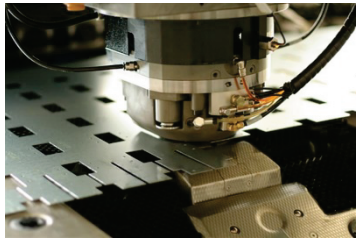

Stamping

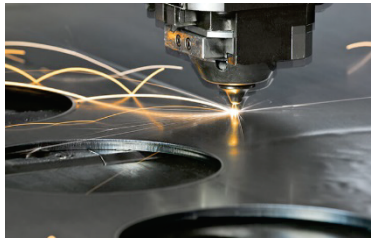

Laser Cutting

Face Visors
Assembly Instructions

MTC – Private – Commercial in Confidence

Step	Description
1	Align Part A and Part B in correct orientation
2	Push Part B tab into Part A slots
3	Push Part A's "peak" slots onto tabs found on Part A and Part B
4	Push Part C chamfered end through the slots in Part A
5	Hole punch the A4 PVC sheet from both sides on the A6 setting
6	Thread head strap tabs through the 4 holes on the PVC sheet to assemble

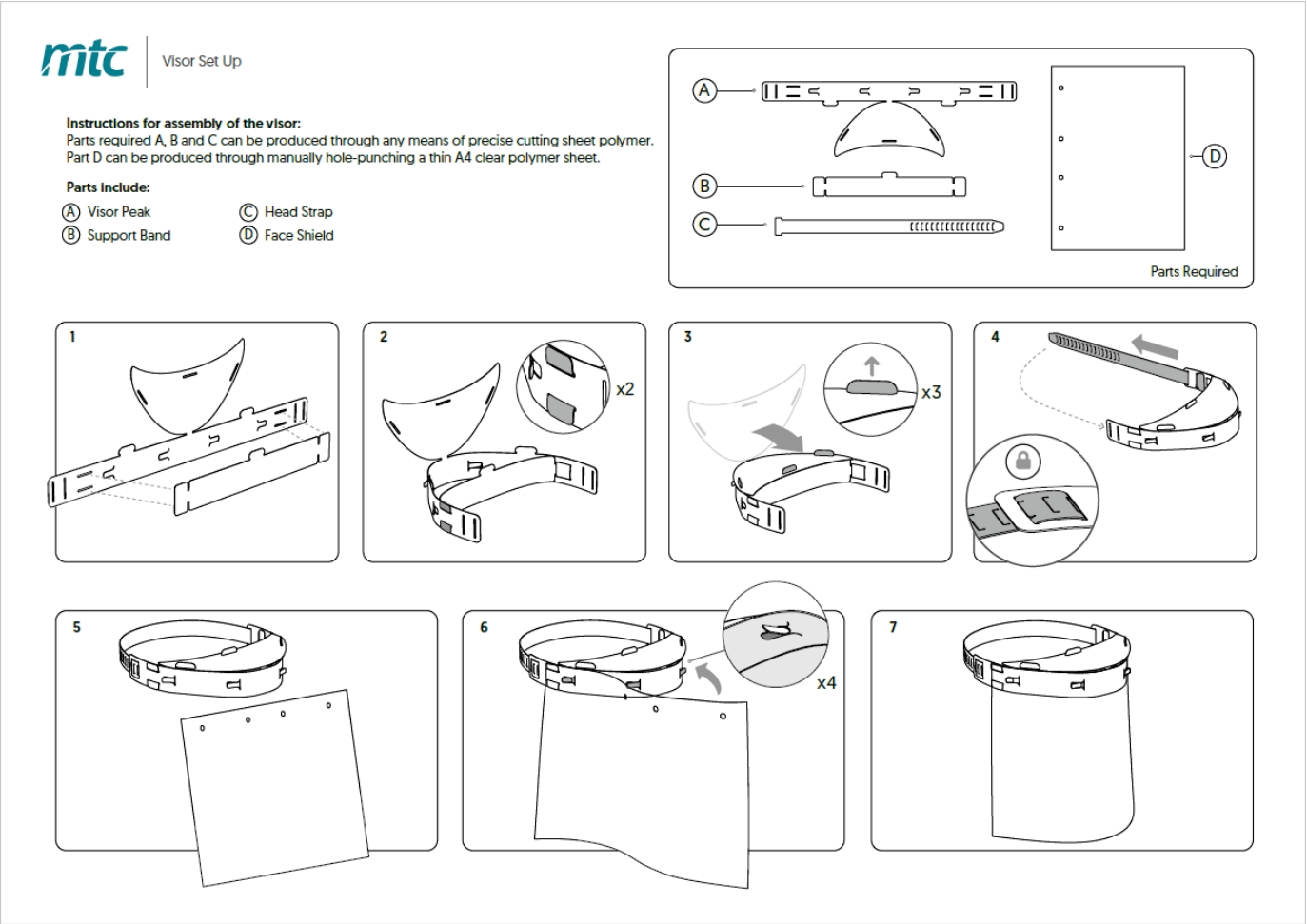

Align Part A and Part B in correct orientation

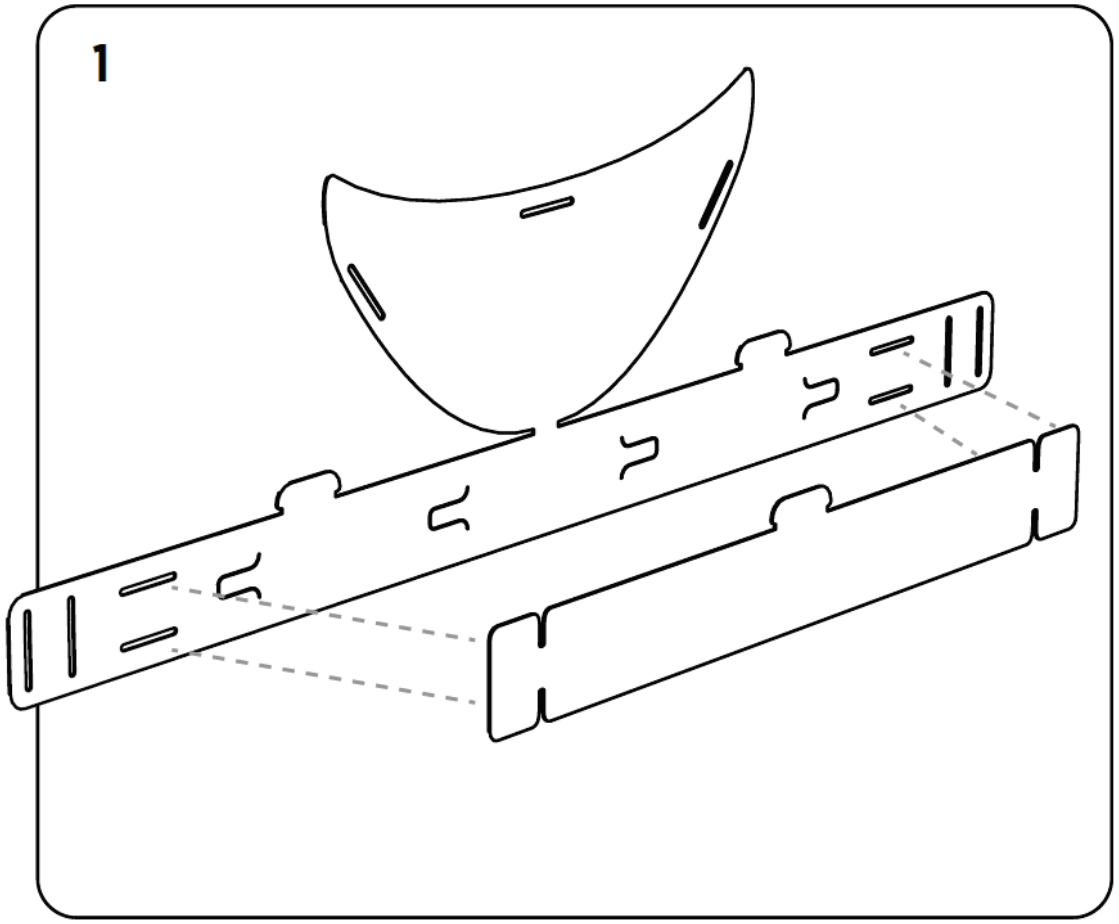

Push Part B tab into Part A slots

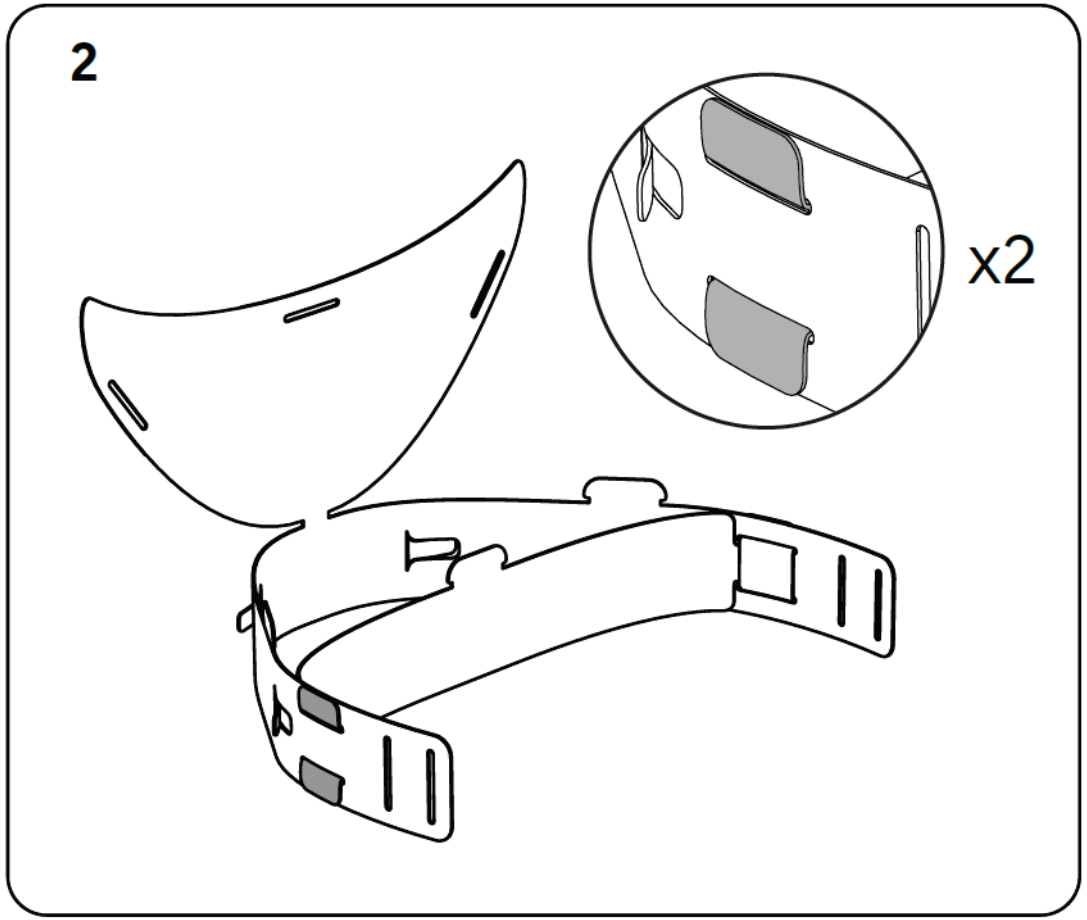

Push Part A's "peak" slots onto tabs found on Part A and Part B

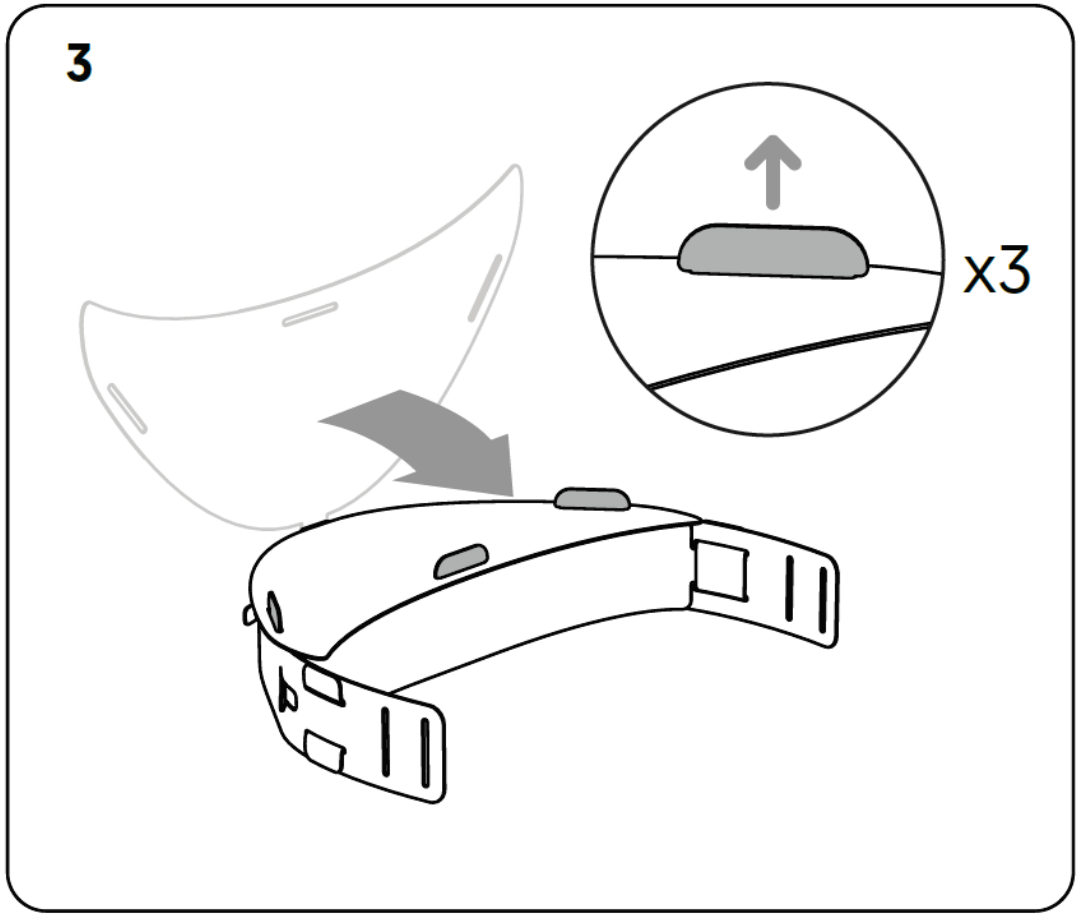

Push Part C chamfered end through the slots in Part A

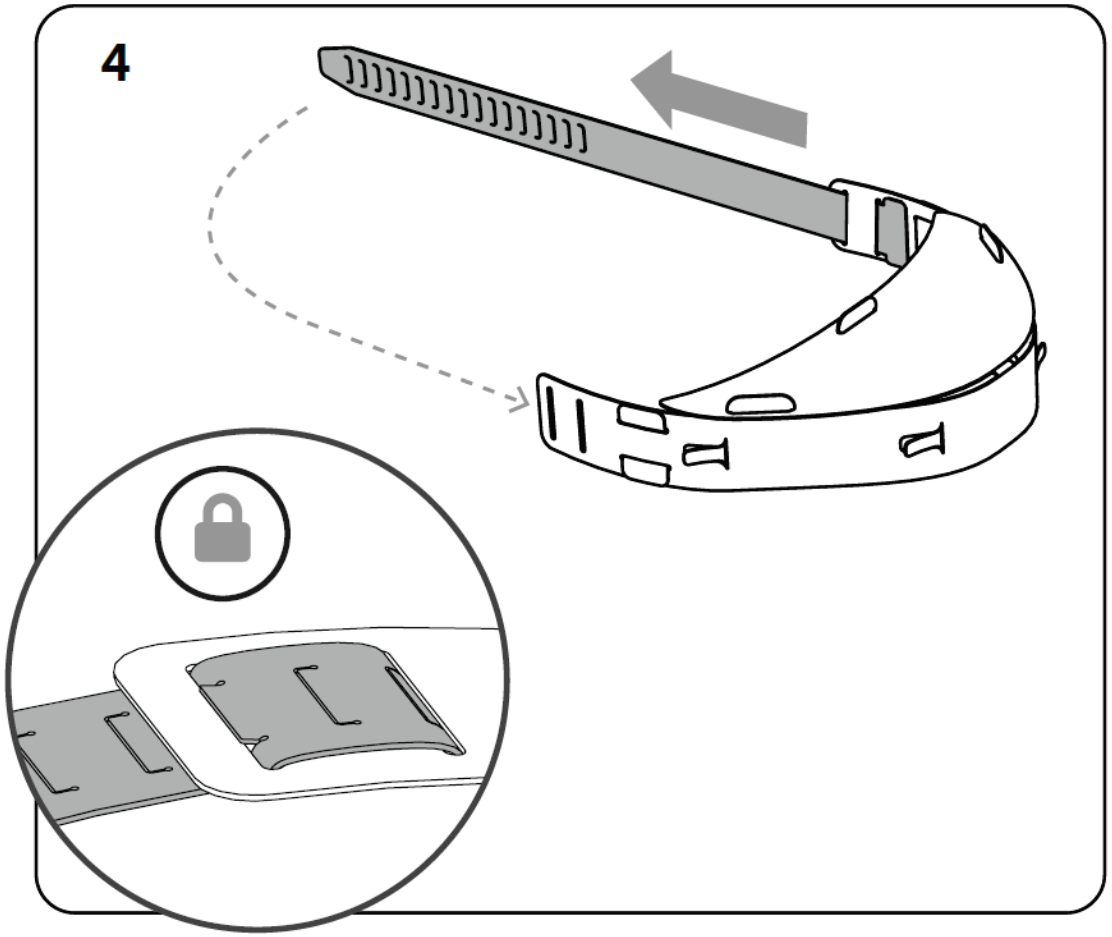

Ensure tabs on Visor Headband align with holes in Face Shield

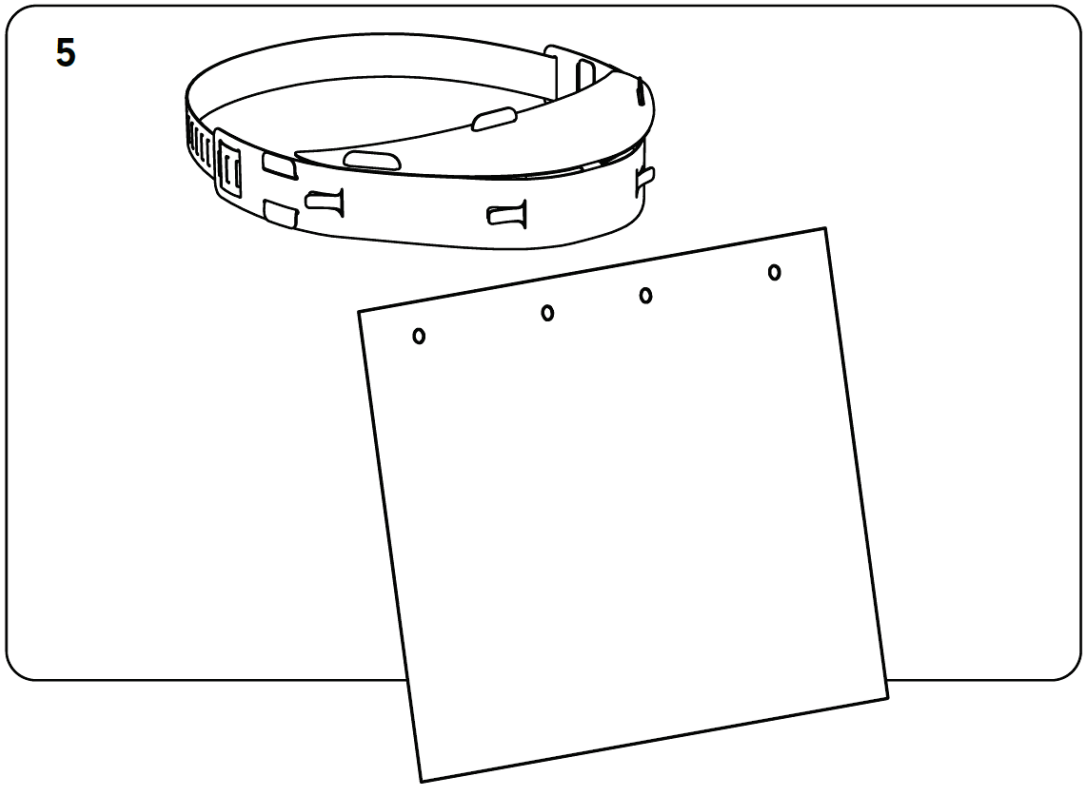

Thread head strap tabs through the 4 holes on the Face Shield sheet to assemble

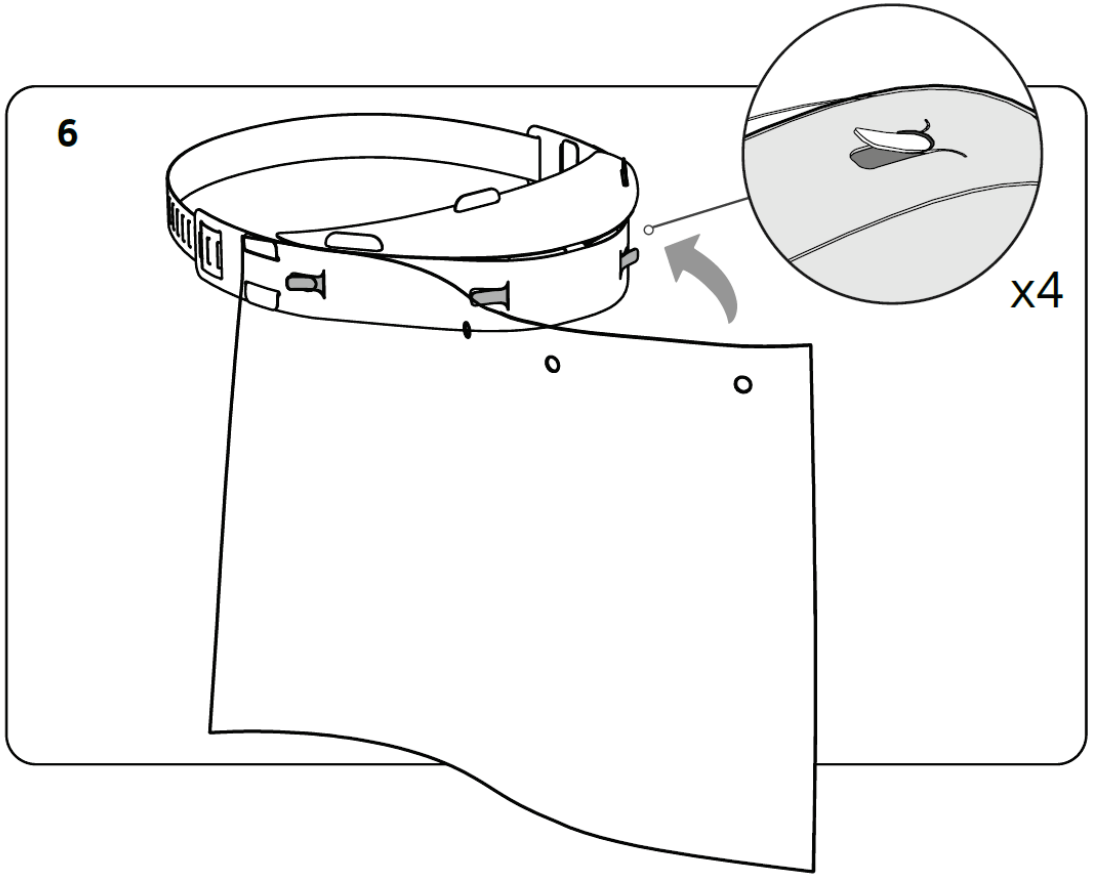

Ensure all tabs are secure and free of excess material

Un-lock the Adjustable Strap and nest the Visor Headbands as shown, with the Face Shields packaged separately to be assembled before use (suggestion to pack minimum 2 Face Shields per Visor Headband)

Face Visors
User Instructions

MTC – Private – Commercial in Confidence

Instructions should be supplied to the users which describes how to assemble the Face Shield to the Visor Headband and how to adjust the Visor.

Document can be found in design pack.

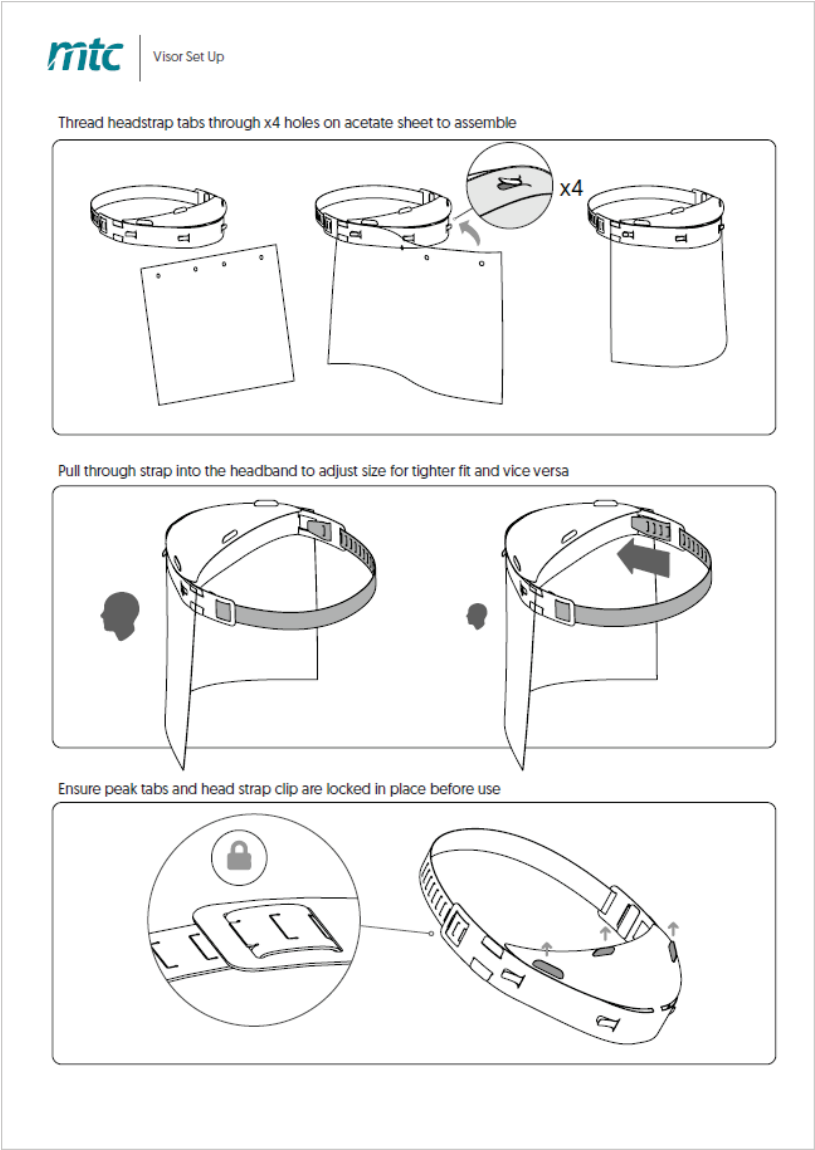

Thread headband tabs through the four holes on face shield to assemble

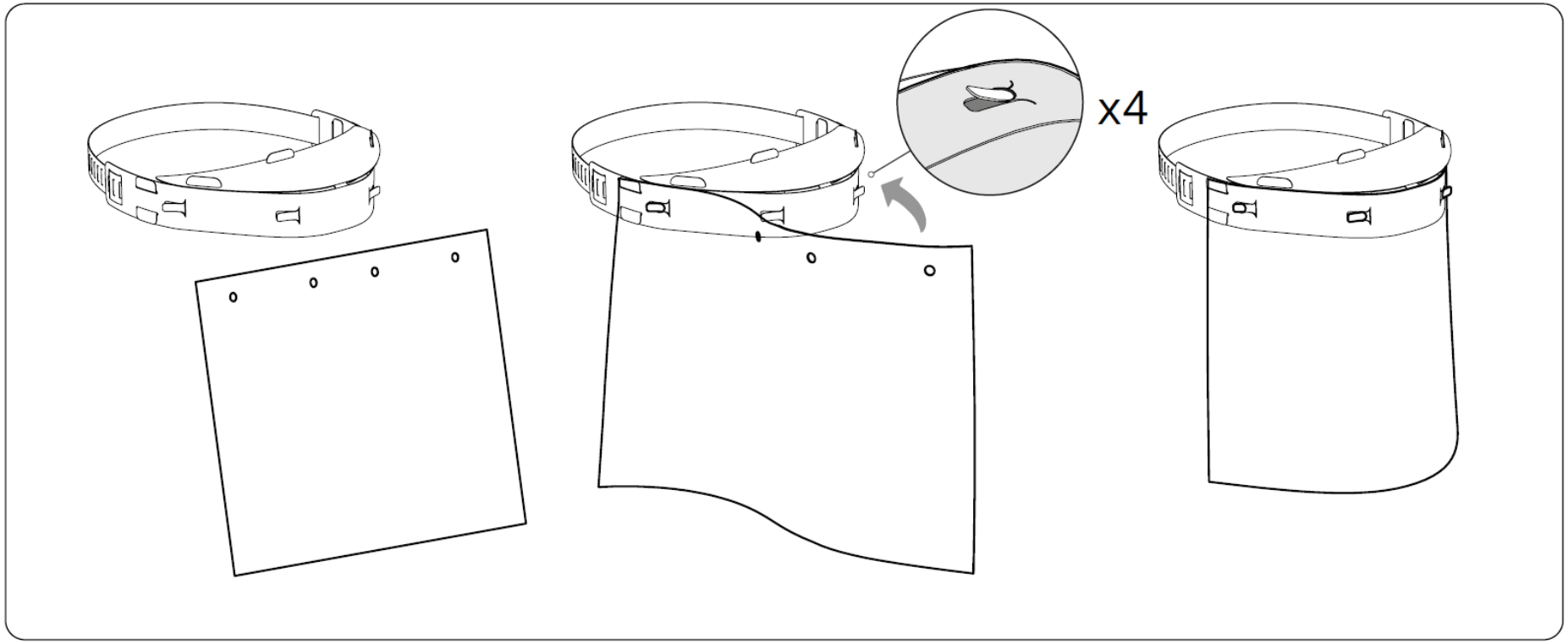

Pull through strap into the headband to adjust size for tighter fit and visa versa

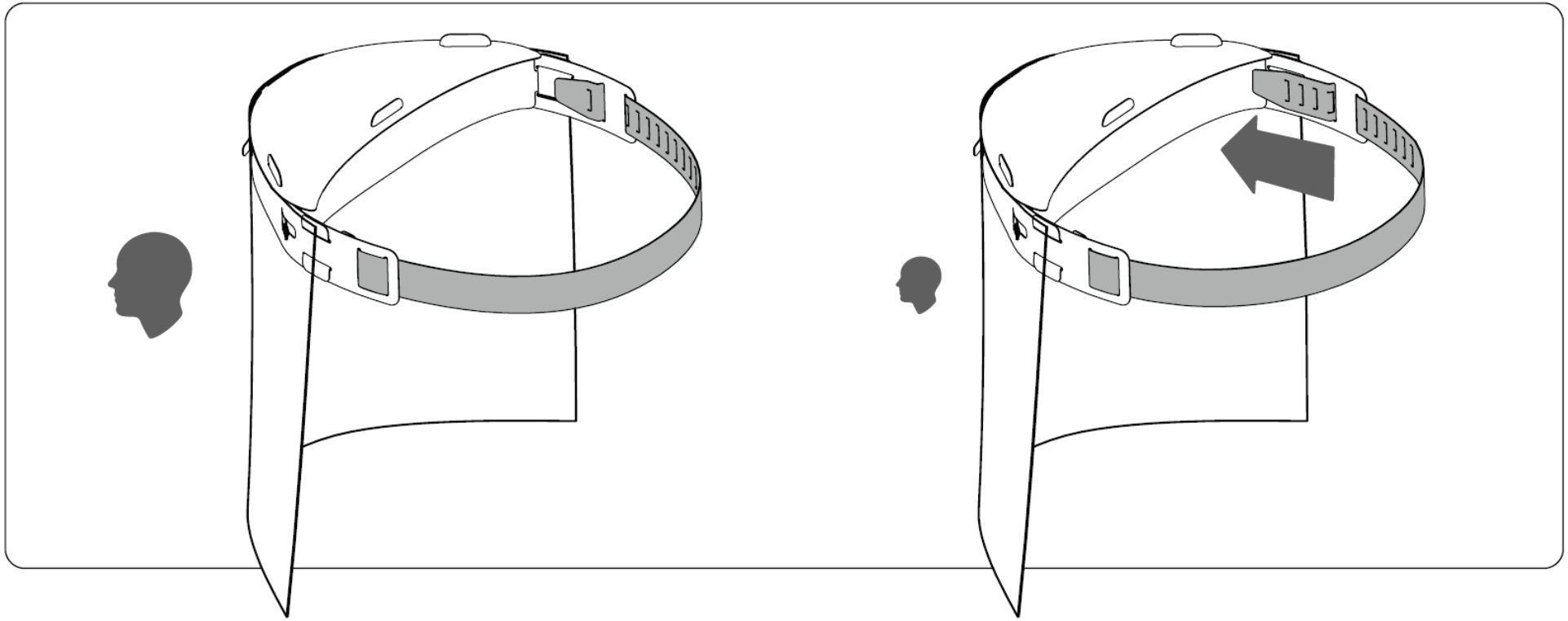

Ensure peak tabs and head strap clip are locked in place before use

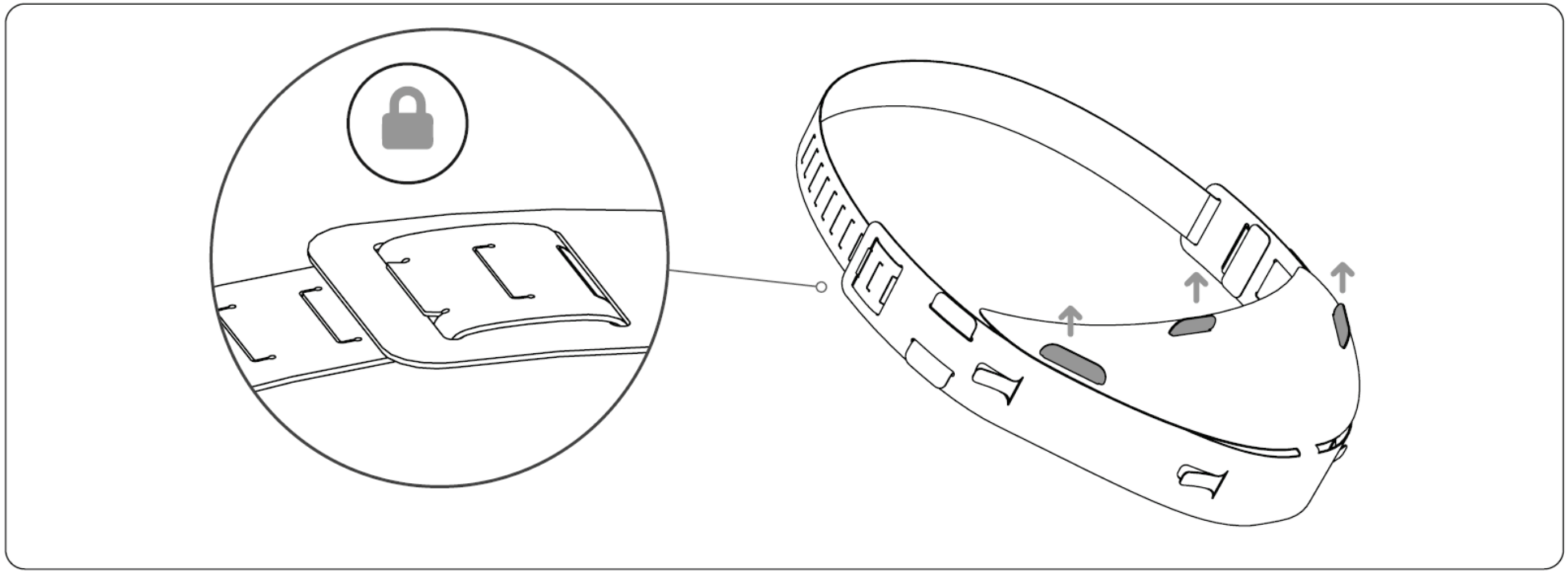

Visor Headband:

It is thought that the Visor Headband could be reused by using sanitising wipes, using the workflow below.

Face Shield:

The Face Shield could also be wiped down and reused, however this may be safer and easier to replace more often.

Recommended Cleaning Products

Remove Visor Headband from head ▶ Remove Face Shield from Visor Headband ▶ Remove Face Shield from Visor Headband ▶ Use wipes to clean the Visor Headband ▶ Assemble new/clean Face Shield

Drawings

DXF files of the separate parts (A, B, C, D)
DXF file of a suggested bed layout (bed size 300 x 600mm)

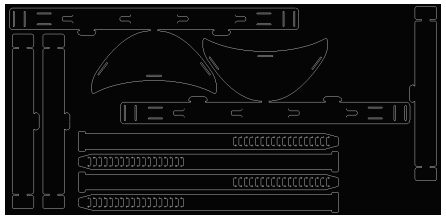

Visor Assembly Instructions

To be sent to the end user to assemble the Face shield to the Visor Headband

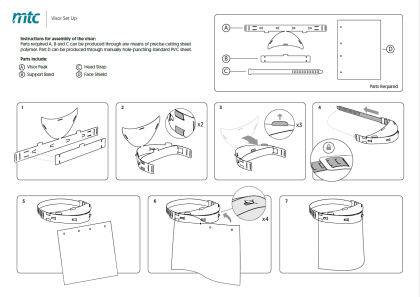

Visor User Assembly Instructions

To be sent to the end user to assemble the Face shield to the Visor Headband

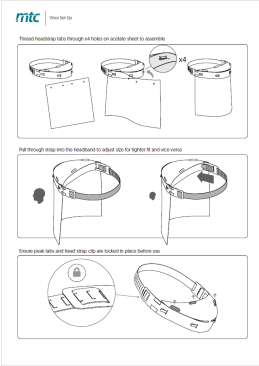

Require Further Support?

Whether you have questions, require further support, or need help sourcing a manufacturer or supply chain, please get in touch and we will endeavour to help.

We are also offering guidance to supply chains and manufacturers who may wish to use the technical design pack.

For further help and support, please email: covid19support@the-mtc.org